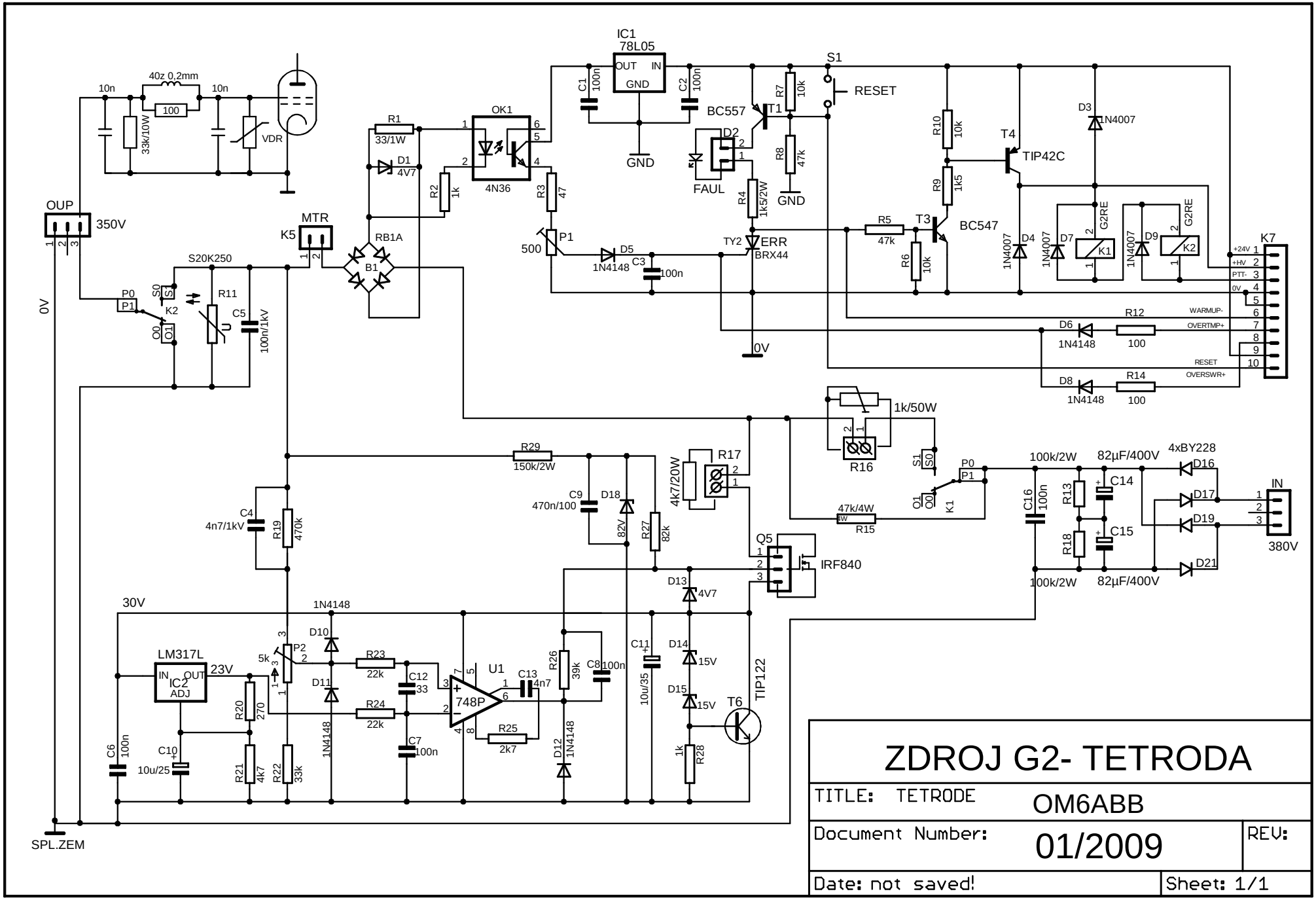

10.01.2009 14:40:55 D:\Eagle.4,16profesional\projects\Zdroj G3SEK 1\TETRODE.sch (Sheet: 1/1)