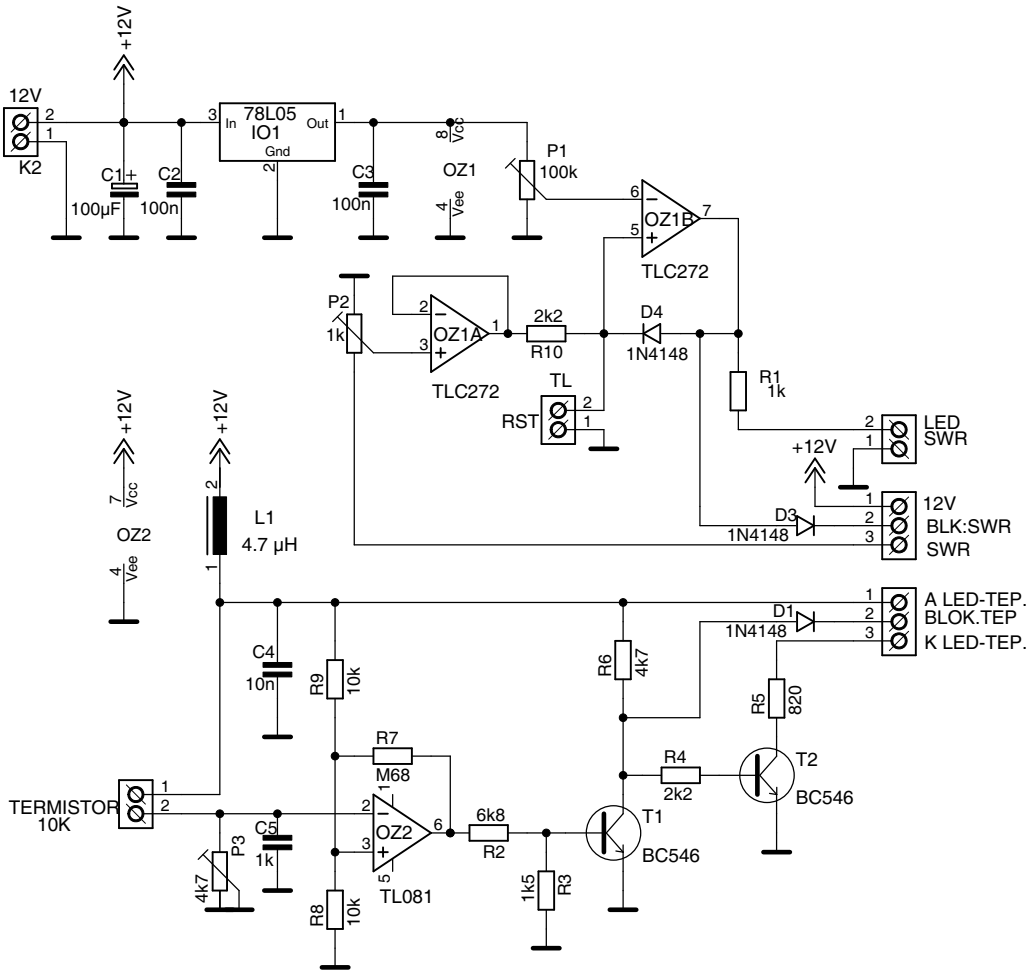

OM6BB

TITLE: ochrany THT

Document Number:

REV:

Date: not saved!

Sheet: 1/1