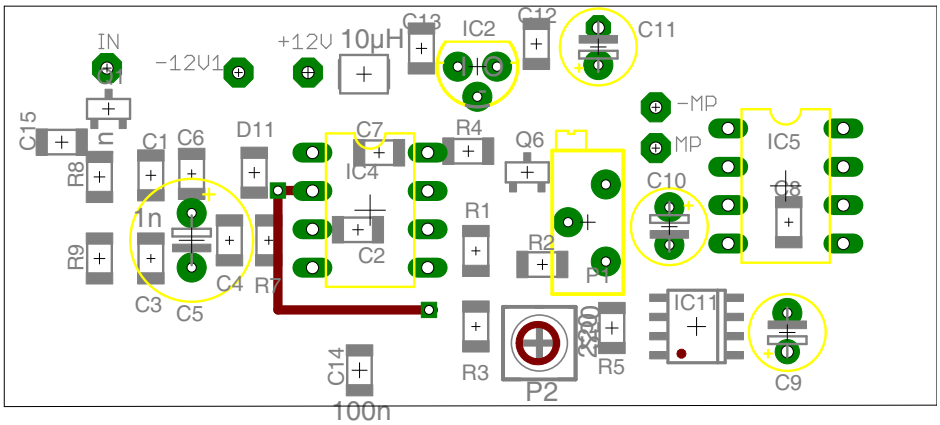
IN
-12V1
+12V
10µH
C13
IC2
C12
C11
-MP
MP
C15
C1
C6
D11
C7
R4
Q6
IC5
R8
IC4
C10
C8
1n
R1
R9
C2
R2
P1
C3
C5
C4
R7
IC11
R3
P2
R5
C9
C14
100n